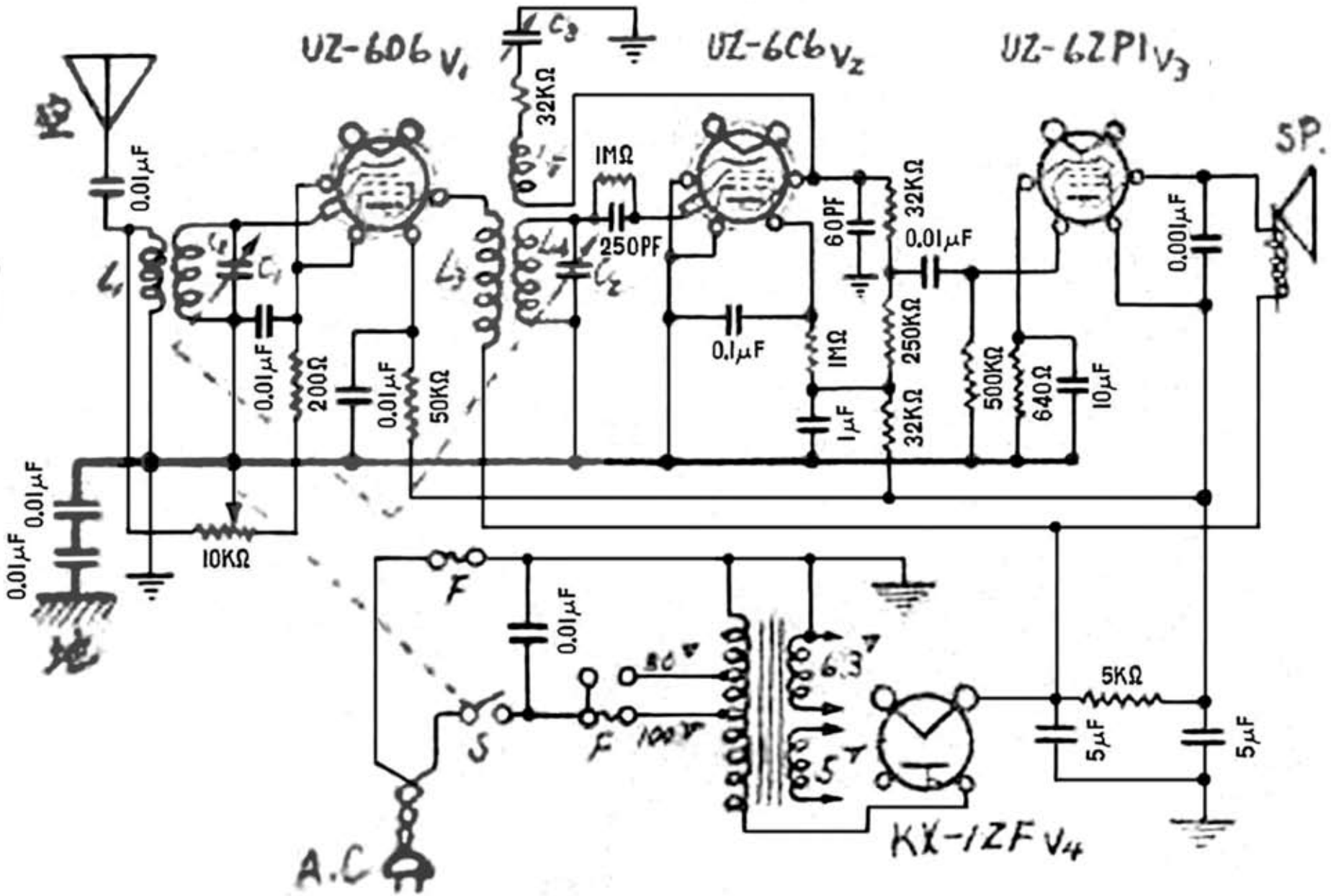

Edit by JA3GZP

4R-30 配線圖